REVISION				
SYM	ZONE	DESCRIPTION	DATE	APPROVAL

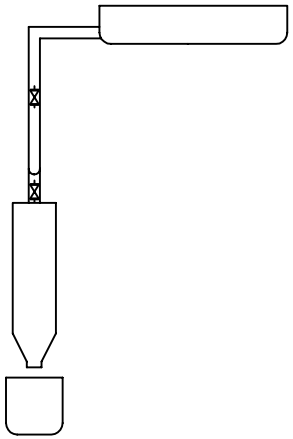

LEFT SIDE VIEW

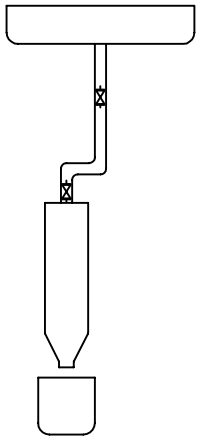

REAR ELEVATION

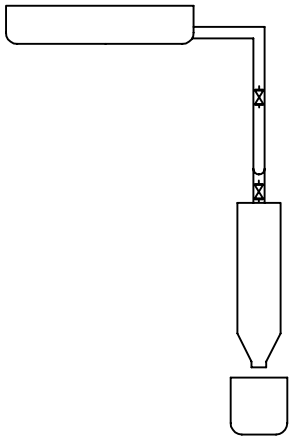

RIGHT SIDE VIEW

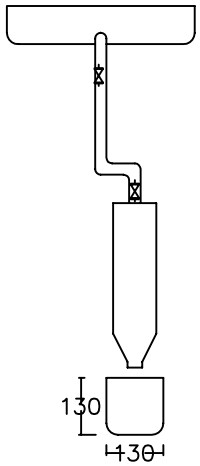

FRONT ELEVATION

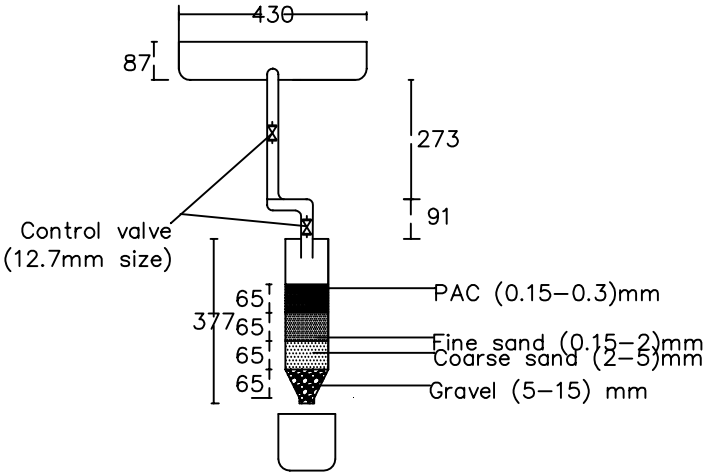

SECTION THROUGH A–A

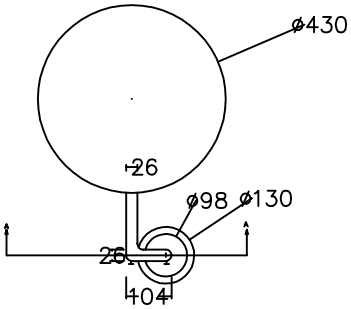

PLAN

ITEM NO	REQD	REQD	PART NO	DESCRIPTION	MATERIAL	MATERIAL SPEC AND NO
				PLAN, ELEVATIONS, AND SECTION OF ADSORBENT FILTERS AND SETLING TANK		

LIST OF MATERIAL

METRIC
HYBRID
METRIC/ INCH

FIRST ANGLE PROJECTION

UNLESS OTHERWISE SPECIFIED, DIMENSION ARE IN MM

DIMENSION TOLERANCES
2 DECIMAL ±0.25
1 DECIMAL ±0.5
DECIMAL ±1
ANGLE ±1°
RAD/CHAM ±0.5

3.2 FINISH IN MICRO-METERS

REMOVE ALL BURRS AND SHARP EDGES R 0.25 OR CHAMFER MAX

THIS DRAWING WAS PRODUCED USING

SOFTWARE: AUTOCAD VERSION: 2019
FILE NAME: LAB SCALE

NEXT ASSY | USED ON

UGANDA CHRISTIAN UNIVERSITY BSCEE FYP

NAME	INIT	DATE
DESIGNER: ERIC M AND ANDREW M		24/03/2024
DRAWN: ERIC M AND ANDREW M		24/03/2024
CHECKED: ENG. DR.WOZEI E		
MECHANICAL ENGINEER		
SYSTEM ENGINEER		
ELECTRICAL ENGINEER		
STRESS ENGINEER		

DRAWING INTERPRETED PER GSFC–X673–64–1

TITLE: THE HOUSEHOLD SCALE PROTOTYPE USED IN THE IRON REDUCTION

GD